SPECIFICATION
FOR
LCD MODULE

Customer : _____

CustomerP/N _____

Model No. : B25C55255Q-01-C

Version : V00

Date : 2025-03-20

Final Approval by Customer

LCM Machinery OK ☐	Checked By	
LCM Display OK ☐	Checked By	
LCM NG ☐ LCM OK ☐	Approved By	

ShenZhen BELIJ Confirmed :

DESIGN	CHECK	APPROVAL

Add: 3/F,C Building.zhongnangang.Industrial city,sili Road.guanlan Town,shenzhen city
Http: www.szbelij.com
Tel: (0755)29062552 Fax: (0755)29062550 PC: 518000

LIST OF CONTENTS

No.	CONTENTS	PAGE
1	REVISION HISTORY	
2	GENERAL INFORMATION	
3	ABSOLUTE MAXIMUM RATINGS	
4	DC ELECTRICAL CHARACTERISTICS	
5	TIMING CHARACTERISTICS	
6	RESET TIMING	
7	EXTERNAL DIMENSIONS	
8	INTERFACE SIGNALS	
9	ELECTRO-OPTICAL CHARACTERISTICS	
10	RELIABILITY TEST CONDITIONS	
11	INSPECTION CRITERION	
12	PRECAUTINGS FOR USING LCD MODULES	

The information contained herein is the exclusive property of ShenZhen BELIJ Electronic technology co., LTD, and shall not be distributed, reproduced, or disclosed in whole or in part without prior written permission of ShenZhen BELIJ Electronic technology co., LTD.

1 REVISION HISTORY

Version	Date	Description	Revised By
V00	2025-03-20	First Issued	LQ
V01			

The information contained herein is the exclusive property of ShenZhen BELIJ Electronic technology co., LTD, and shall not be distributed, reproduced, or disclosed in whole or in part without prior written permission of ShenZhen BELIJ Electronic technology co., LTD.

2 GENERAL INFORMATION

Item	Specification	Unit
LCD size 液晶面板尺寸	5.5	inch
Display Mode 显示模式	Normally Black	--
Resolution 分辨率	480(RGB)x960	Pixel
Pixel pitch 像素尺寸	0.129 (H) x 0.043 (V)	mm
Pixel Arrangement 像素排列	RGB Vertical Stripe	
Viewing direction 视角	Free	-
Module outline dimension	73.48 (H)*144.35 (V)*3.51(D)	mm
LCD AA 液晶显示区域	61.92 (H)* 123.75 (V)	mm
TP VA 触摸可视区域	62.48 (H)* 124.35 (V)	mm
Driver IC 驱动芯片	ST7701SN	-
Interface 接口类型	MIPI	--
Touch IC 触摸芯片	ST1633I	--
Surface hardness 表面硬度	6H	--
支持点数	多点	--
Touch structure 触摸结构	G+FF	--
Cover lens 盖板	旭硝子	--
Operating Temperature 工作温度	-20℃~ +60℃	--
Storage Temperature 存储温度	-30℃~ +70℃	--
环保要求	ROHS	--

The information contained herein is the exclusive property of ShenZhen BELIJ Electronic technology co., LTD, and shall not be distributed, reproduced, or disclosed in whole or in part without prior written permission of ShenZhen BELIJ Electronic technology co., LTD.

3 ABSOLUTE MAXIMUM RATINGS

Parameter	Symbol	Min	Max	Unit	Note
Power Supply voltage 1	VCC~GND	-0.3	+4.6	V	
Power Supply voltage 2	IOVCC~GND	-0.3	+4.6	V	
Logic Input Voltage Range	V_{IN}	-0.3	IOVCC+0.3	V	
Logic Output Voltage Range	V_O	-0.3	IOVCC+0.3	V	
Operating temperature	Topr	-20	+60	℃	
Storage temperature	Tstg	-30	+70	℃	

* The absolute maximum rating values of this product are not allowed to be exceeded at any times. Should a module be used with any of the absolute maximum ratings exceeded, the characteristics of the module may not be recovered, or in an extreme case, the module may be permanently destroyed.

4 DC ELECTRICAL CHARACTERISTICS

4.1 Driving TFT LCD Panel

AGND = GND = 0V, Ta = 25℃

Parameter	Symbol	Min	Typ	Max	Unit
Supply voltage for analog circuit	VCC	2.5	2.8	3.6	V
Supply voltage for logic circuit	IOVCC	1.65	1.8	3.3	V
Input voltage 'H'level	V_{IH}	0.7*IOVCC	—	IOVCC	V
Input voltage 'L'level	V_{IL}	GND	—	0.3*IOVCC	V
Output voltage 'H'level	V_{OH}	0.8*IOVCC	—	IOVCC	V
Output voltage 'L'level	V_{OL}	GND	—	0.2*IOVCC	V

4.2 Backlight Characteristics

Ta = 25℃

Item	Symbol	Min	Typ	Max	Unit	Condition
Forward voltage	Vf	19.6	21	23.1	V	If=40 mA
Luminance	LV	/	/	—	cd/㎡	
Number of LED	-	7X2			Piece	-
Connection mode	S/P	7Serial/2Parallel			-	-

Using condition: constant current driving method If= 20×2mA (+/-10%)

The information contained herein is the exclusive property of ShenZhen BELIJ Electronic technology co., LTD, and shall not be distributed, reproduced, or disclosed in whole or in part without prior written permission of ShenZhen BELIJ Electronic technology co., LTD.

5 TIMING CHARACTERISTICS

5.1 Serial Interface Characteristics(3-line serial)

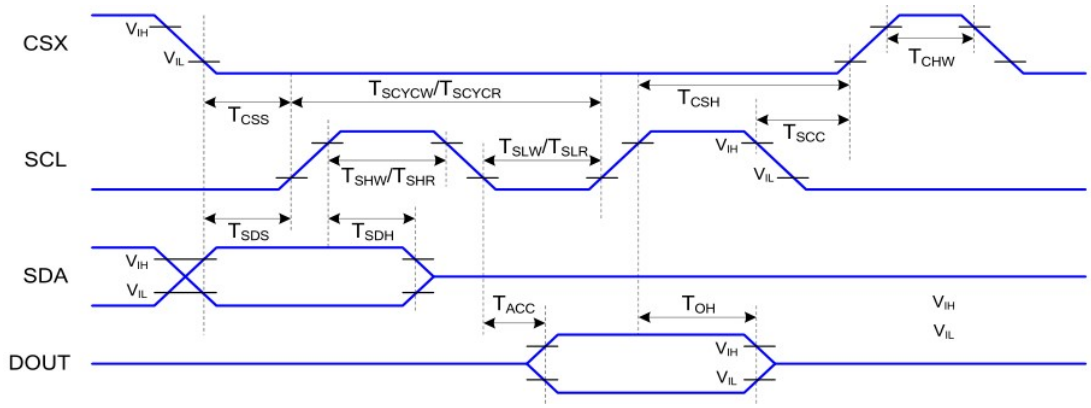

Ta=25℃, IOVCC=1.65~3.7V, VCC=2.5~3.7V

Signal	Symbol	Parameter	Min	Max	Unit	Description
CSX	TCSS	Chip select setup time(write)	15	-	ns	
	TCSH	Chip select hold time(write)	15	-	ns	
	TCSS	Chip select setup time(read)	60	-	ns	
	TSCC	Chip Select hold time(read)	60	-	ns	
	TCHW	Chip Select 'H' pulse width	40	-	ns	
SCL	TSCYCW	Serial clock cycle(write)	66	-	ns	Write Command & Data Ram
	TSHW	SCL 'H' pulse width(write)	15	-	ns	
	TSLW	SCL 'L' pulse width(write)	15	-	ns	
	TSCYCR	Serial clock cycle(read)	150	-	ns	Read Command & Data Ram
	TSHR	SCL 'H' pulse width(read)	60	-	ns	
	TSLR	SCL 'L' pulse width(read)	60	-	ns	
SDA (DIN)	TSDS	Data setup time	10	-	ns	
	TSDH	Data hold time	10	-	ns	

Note : The rising time and falling time (Tr, Tf) of input signal are specified at 15 ns or less. Logic high and low levels are specified as 30% and 70% of IOVCCfor Input signals.

Table 5.1 3-line Serial Interface Characteristics

5.3 RGB Interface Characteristics

The information contained herein is the exclusive property of ShenZhen BELIJ Electronic technology co., LTD, and shall not be distributed, reproduced, or disclosed in whole or in part without prior written permission of ShenZhen BELIJ Electronic technology co., LTD.

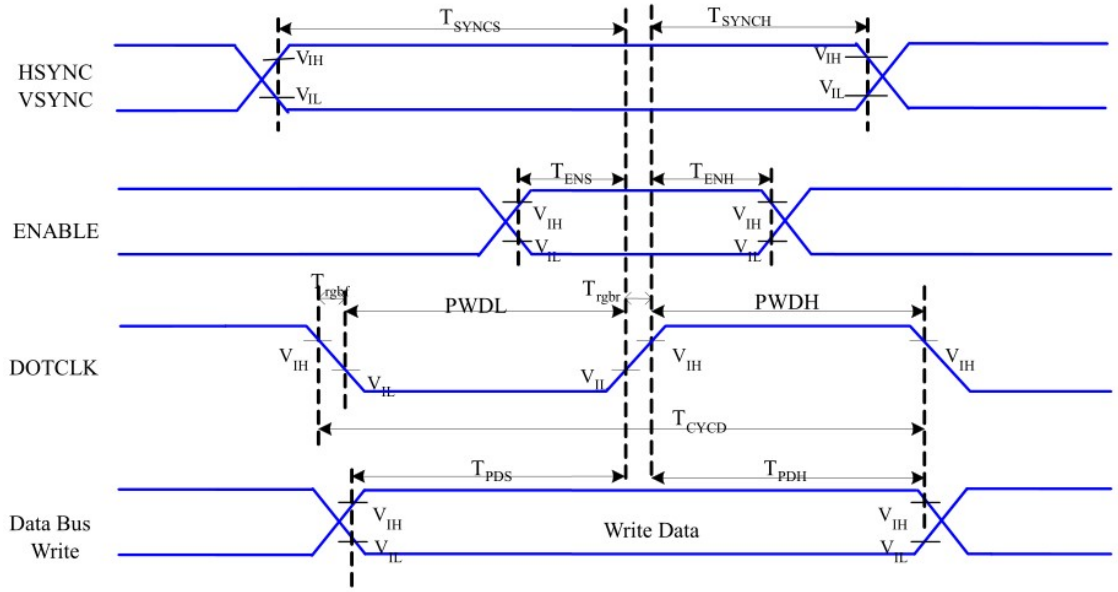

DSI Low Power Mode Characteristics

6. Reset Timing

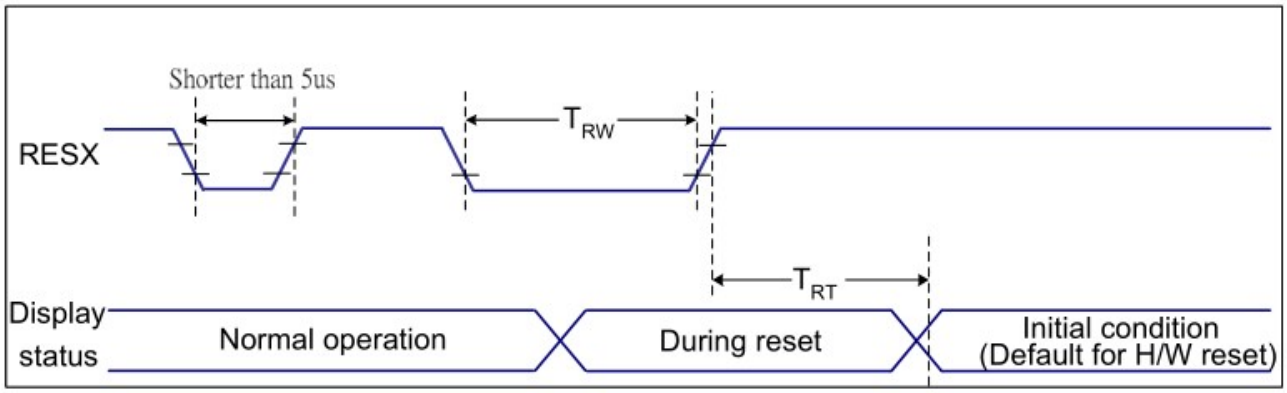

Figure 9 Reset Timing

VDDI=1.8,VDD=2.8, AGND=DGND=0V, Ta=25 ℃

Related Pins	Symbol	Parameter	MIN	MAX	Unit
RESX	TRW	Reset pulse duration	10	-	us
	TRT	Reset cancel	-	5 (Note 1, 5)	ms
				120(Note 1, 6, 7)	ms

Table 9 Reset Timing

The information contained herein is the exclusive property of ShenZhen BELIJ Electronic technology co., LTD, and shall not be distributed, reproduced, or disclosed in whole or in part without prior written permission of ShenZhen BELIJ Electronic technology co., LTD.

7 EXTERNAL DIMENSIONS

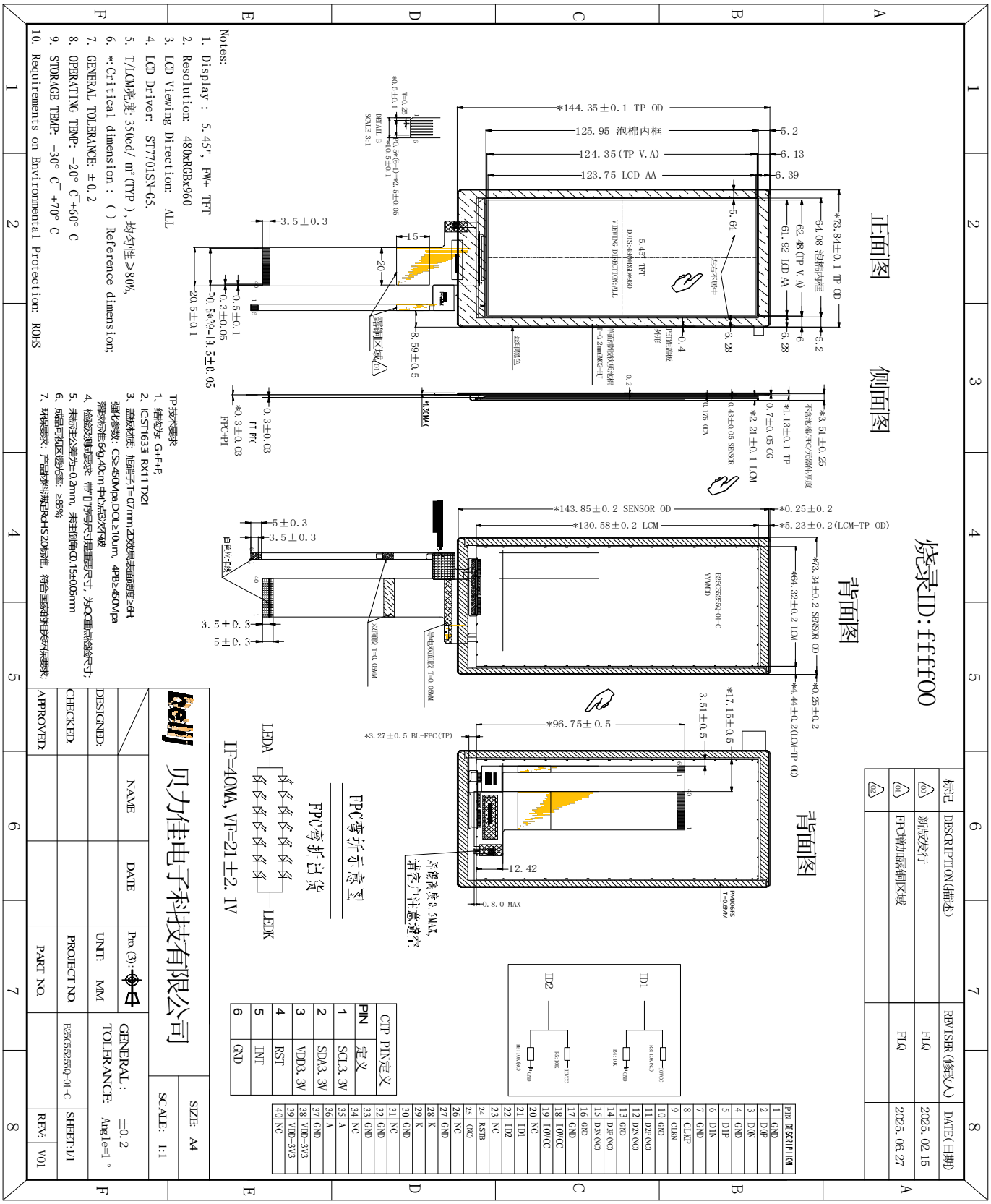

8 INTERFACE SIGNAL

Pin No.	Symbol	Description
1	LEDK	LED backlight cathode
2	LEDA	LED backlight anode
3	GND	Power ground
4	VCC	Analog power supply
5-12	R0-R7	RGB-Data bus
13-20	G0-G7	RGB-Data bus
21-28	B0-B7	RGB-Data bus
29	GND	Power ground
30	PCLK	Pixel clock signal in RGB interface
31	NC	NC
32	HSYNC	Horizontal synchronizing signal input pin
33	VSYNC	Vertical synchronizing signal input pin
34	DEN	Data enable signal in RGB I/F mode
35	TE	Serves TE (Tearing Effect) pin on MPU interface.
36	GND	Power ground
37	SCL	Write signal input pin.
38	SDA	Serial data input pin in serial bus system interface
39	CS	Chip select
40	RESET	Reset signal(low active)

The information contained herein is the exclusive property of ShenZhen BELIJ Electronic technology co., LTD, and shall not be distributed, reproduced, or disclosed in whole or in part without prior written permission of ShenZhen BELIJ Electronic technology co., LTD.

9 ELECTRO-OPTICAL CHARACTERISTICS

Item		Symbol		Condition	Min	Typ	Max	Unit	Note
Transmittance (w/o DBEF)		T%		θ=0° Ta=25℃	-	4.47	-	%	1
Contrast ratio		Cr			640	800	-	-	3
Response time		Ton+Toff			-	20	25	ms	4
LCM+TP Luminance		LV			--	300	-	cd/㎡	2
Viewing angle range		H or V er	Θ_{x+}	Center CR>10	-	80	-	deg	5
			Θ_{x-}		-	80	-	deg	
			Θ_{Y+}		-	80	-	deg	
			Θ_{Y-}		-	80	-	deg	
CIE(x,y) chromaticity	Red	x		Viewing normal angle Θx=θy=0° Ta=25℃	0.634	0.654	0.674	-	6
		y			0.299	0.319	0.339	-	
	Green	x			0.239	0.259	0.279	-	
		y			0.554	0.574	0.594	-	
	Blue	x			0.120	0.140	0.160	-	
		y			0.064	0.084	0.104	-	
	White	x			0.28	0.31	0.34	-	
		y			0.30	0.33	0.36	-	

Note 1.Ambient condition：25℃±2℃，60±10%RH，under 10 Lunx in the darkroom。

Note 2.Measure device：BM-7A (TOPCON)，viewing cone=2°

Lv = Average Surface Luminance with all white pixels (P1,P2,P3,P4,P5)

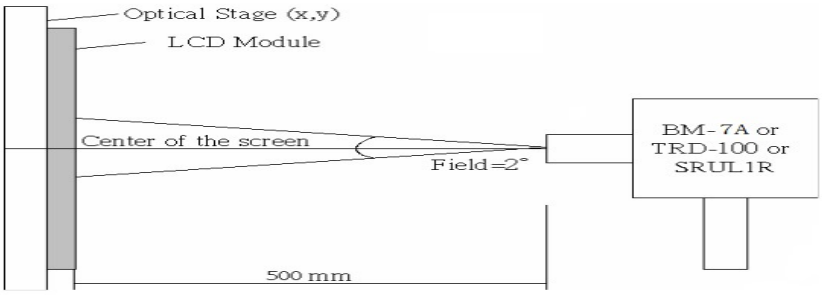

Note 3. Definition of Contrast Ratio：

$$CR = \frac{\text{Average Surface Luminance with all black pixels (P1,P2,P3,P4,P5)}}{}$$

The information contained herein is the exclusive property of ShenZhen BELIJ Electronic technology co., LTD, and shall not be distributed, reproduced, or disclosed in whole or in part without prior written permission of ShenZhen BELIJ Electronic technology co., LTD.

Average Surface Luminance with all white pixels (P1,P2,P3,P4,P5)

Note 4. Definition of Response Time (Ton, Toff), The response time is defined as the time interval between the 10% and 90% amplitudes.

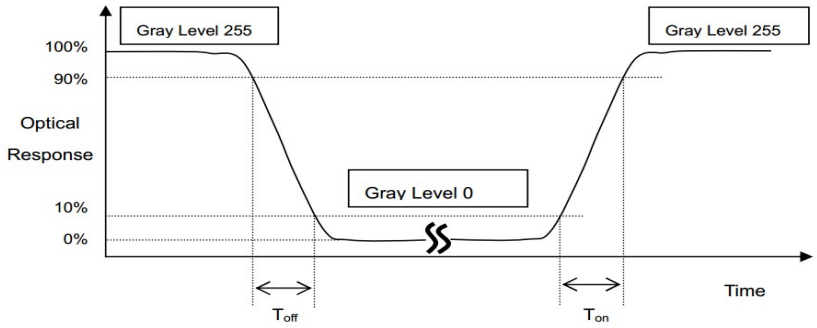

Note 5. Definition of view angle(θ，ψ)：

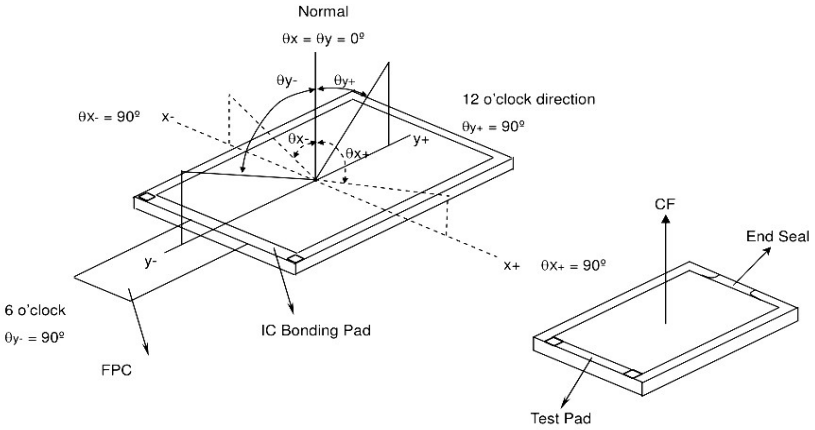

Note 6. The LCD module should be stabilized at a given temperature for 20 minutes to avoid abrupt temperature change during measuring. In order to stabilize the luminance, the measurement should be executed after lighting Backlight for 20 minutes in a windless room. Measouring method for Contrast ratio, surface luminance, Luminance uniformity,CIE(x,y) chromaticity.

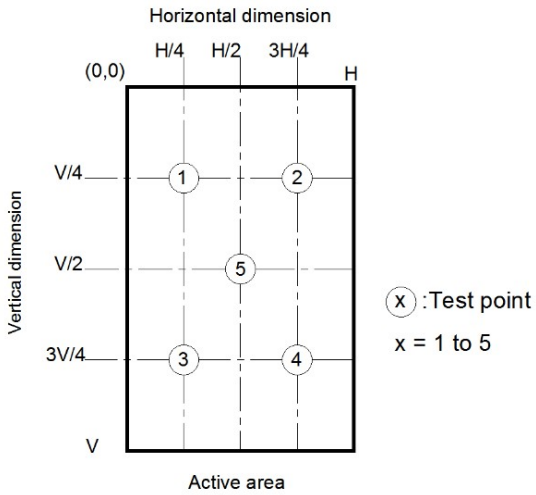

Light spot size ∅=7mm, 500mm distance from the LCD surface to detector lens measurement instrument is TOPCON's luminance meter BM-7

The information contained herein is the exclusive property of ShenZhen BELIJ Electronic technology co., LTD, and shall not be distributed, reproduced, or disclosed in whole or in part without prior written permission of ShenZhen BELIJ Electronic technology co., LTD.

10 RELIABILITY TEST

Reliability test conditions (Polarizer characteristics null)

No.	Items	Condition	Inspection after test
1	High Temperature Storage	T = 70℃ for 168 hr	Inspection after 4 hours storage at room temperature, the sample shall be free from defects: 1.Air bubble in the LCD 2.Sealleak; 3.Non-display; 4.missing segments; 5.Glass crack; 6.Current Idd is twice higher than initial value.
2	Low Temperature Storage	T = -30℃ for 168 hr	
3	High Temperature Operating	T = 60℃ for 168 hr	
4	Low Temperature Operating	T = -20℃for 168 hr (But no condensation of dew)	
5	High Temp. and High Humidity Storage	T = 60℃℃ /90% for 168 hr (But no condensation dew)	
6	Thermal Shock	-20±2°C~25~70±2°C×10cycles (30min.) (5min.) (30min.)	
7	Dropping test (non-operation)	Drop to the ground from 76cm height, one time, every side of carton. (Packing condition)	
8	Packing Vibration (non-operation)	Frequency：10Hz~55Hz~10Hz Amplitude：1.0mm, X，Y，Z direction for total 3hours (Packing condition)	
9	ESD	150 pF, 0 Ω, ±300 V, Contact 150 pF, 330 Ω, ±6 KV, Air	

Note:

(1)The test samples should be applied to only one test item.

(2)Sample size for each test item is 5~10pcs.

(3)In case of malfunction defect caused by ESD damage, if it would be recovered to normal state after resetting, it would be judge as a good part.
Using ionizer(an antistatic blower) is recommended at working area in order to reduce electro-static voltage.
When removing protection film from LCM panel, peel off the tag slowly (recommended more than one second) while blowing with ionizer toward the peeling face to minimize ESD which may damage electrical circuit.

(4) Please use automatic switch testing mode when test operating mode.

The information contained herein is the exclusive property of ShenZhen BELIJ Electronic technology co., LTD, and shall not be distributed, reproduced, or disclosed in whole or in part without prior written permission of ShenZhen BELIJ Electronic technology co., LTD.

11 INSPECTION CRITERION

This specification is made to be used as the standard acceptance/rejection criteria for Normal LCM Product.

1 Sample plan

Sampling plan according to GB/T2828.1-2003/ISO 2859-1：1999 and ANSI/ASQC Z1.4-1993,normal level 2 and based on:

Major defect: AQL 0.65

Minor defect: AQL 1.0

2. Inspection condition

Viewing distance for cosmetic inspection is about 30cm with bare eyes, and under an environment of 20~40W light intensity, all directions for inspecting the sample should be within 45° against perpendicular line. (Normal temperature 20~25°C and normal humidity 60±15%RH).

3. Definition of inspection zone in LCD.

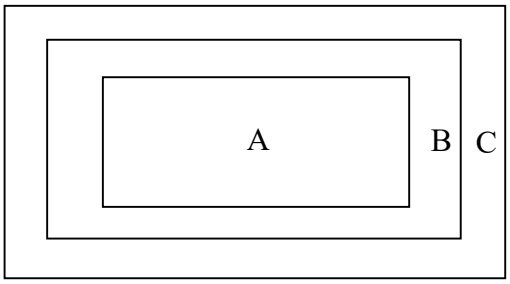

Zone A: character/Digit area

Zone B: viewing area except Zone A (Zone A + Zone B=minimum Viewing area)

Zone C: Outside viewing area (invisible area after assembly in customer's product)

Fig.1 Inspection zones in an LCD.

Note: As a general rule, visual defects in Zone C are permissible, when it is no trouble for quality and assembly of customer's product.

4.Standards of inspection items

4.1 Major Defect

Item No	Items to be inspected	Inspection Standard	Classification of defects
4.1.1	All functional defects	1.No display	Major
		2.Display abnormally	
		3.Missing vertical，horizontal segment	
		4.Short circuit	
		5. Back-light no lighting, flickering and abnormal lighting.	

The information contained herein is the exclusive property of ShenZhen BELIJ Electronic technology co., LTD, and shall not be distributed, reproduced, or disclosed in whole or in part without prior written permission of ShenZhen BELIJ Electronic technology co., LTD.

4.1.2	Missing	Missing component	
4.1.3	Outline dimension	Overall outline dimension beyond the drawing is not allowed.	
4.1.4	linearity	No more than 1.5%	

4.2 Cosmetic Defect

Item No	Items to be inspected	Inspection Standard				Classification of defects
4.2.1	Clear Spots Black and white Spot defect Pinhole, Foreign Particle, polarizer Dirt	For dark/white spot, sizeΦis defined as Φ=(x + y)/2 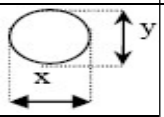				Minor
		1				
		Zone / Size(mm)	Acceptable Qty			
			A	B	C	
		Φ≤0.15	Ignore		Ignore	
		0.15＜Φ≤0.20	2			
		0.20＜Φ≤0.30	1			
		Φ＞0.30	0			
	Clear Spots TP Dirt	2				Minor
		Zone / Size(mm)	Acceptable Qty			
			A	B	C	
		Φ≤0.15	Ignore		Ignore	
		0.15＜Φ≤0.20	2			
		0.20＜Φ≤0.30	1			
		Φ＞0.30	0			
	Dim Spots Circle shaped and dim edged defects	3				Minor
		Zone / Size(mm)	Acceptable Qty			
			A	B	C	
		Φ≤0.2	Ignore		Ignore	
		0.20＜Φ≤0.40	2			
		0.40＜Φ≤0.60	1			
		Φ＞0.60	0			

The information contained herein is the exclusive property of ShenZhen BELIJ Electronic technology co., LTD, and shall not be distributed, reproduced, or disclosed in whole or in part without prior written permission of ShenZhen BELIJ Electronic technology co., LTD.

Item No	Items to be inspected	Inspection Standard					Classification of defects
4.2.2	Line defect Black line, White line, Foreign material on polarizer	Size(mm)		Acceptable Qty			Minor
		L(Length)	W(Width)	Zone			
				A	B	C	
		Ignore	W≤0.05	Ignore		Ignore	
		L ≤5.0	0.05＜W≤0.08	2			
			W＞0.08	0			
	Foreign material on TP film	The line can be seen after mobile phone in the operating condition:					Minor
		Size(mm)		Acceptable Qty			
		L(Length)	W(Width)	Zone			
				A	B	C	
		Ignore	W≤0.05	Ignore		Ignore	
		L ≤5.0	0.05＜W≤0.08	3			
			W＞0.08	0			
4.2.3	Dim line defect Polarizer scratch TP film scratch	If the scratch can be seen after mobile phone cover assembling or in the operating condition, judge by the line defect of 4.2.2. If the scratch can be seen only in non-operating condition or some special angle, judge by the following.					Minor
		Size(mm)		Acceptable Qty			
		L(Length)	W(Width)	Zone			
				A	B	C	
		Ignore	W≤0.03	Ignore		Ignore	
		5.0＜ L≤10.0	0.03＜W≤0.05	2			
		L≤5.0	0.05＜W≤0.08	1			
			W＞0.08	0			
4.2.4	Polarize Air bubble	Air bubbles between glass & polarizer					Minor
		Size(mm) \ Zone		Acceptable Qty			
				A	B	C	
		Φ≤0.20		Ignore		Ignore	
		0.20＜Φ≤0.3		2			
		Φ＞0.30		0			

The information contained herein is the exclusive property of ShenZhen BELIJ Electronic technology co., LTD, and shall not be distributed, reproduced, or disclosed in whole or in part without prior written permission of ShenZhen BELIJ Electronic technology co., LTD.

Item No	Items to be inspected	Inspection Standard			Classification of defects
4.35	Glass defect	(i) Chips on corner A:LCD Glass defect 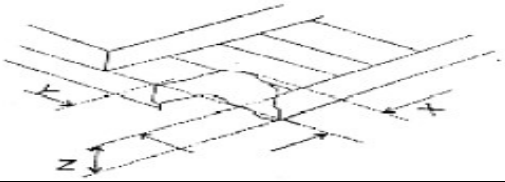			Minor
		X(mm)	Y(mm)	Z(mm)	
		≤3.0	≤3.0	Disregard	
		Notes: S=contact pad length Chips on the corner of terminal shall not be allowed to extend into the ITO pad or expose perimeter seal. B:TP Glass defect 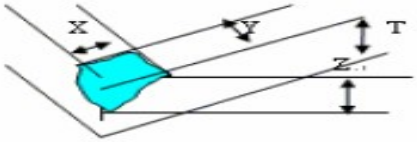			
		X(mm)	Y(mm)	Z(mm)	
		≤3.0	≤3.0	Disregard	
		(ii)Usual surface cracks A:LCD Glass defect 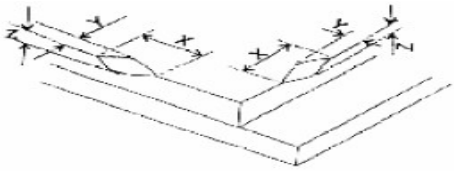			
		X(mm)	Y(mm)	Z(mm)	
		≤3.0	<Inner border line of the seal	Disregard	
		B:TP Glass defect 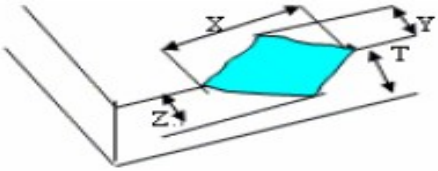			
		X(mm)	Y(mm)	Z(mm)	
		≤6.0	＜2.0	Disregard	
		(iii) Crack Cracks tend to break are not allowed. 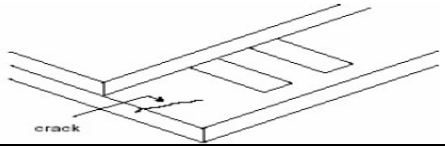 			

The information contained herein is the exclusive property of ShenZhen BELIJ Electronic technology co., LTD, and shall not be distributed, reproduced, or disclosed in whole or in part without prior written permission of ShenZhen BELIJ Electronic technology co., LTD.

12 PRECAUTIONS FOR USE OF LCD MODULES

1. Handling Precautions

(1) The display panel is made of glass and polarizer. As glass is fragile. It tends to become or chipped during handling especially on the edges. Please avoid dropping or jarring. Do not subject it to a mechanical shock by dropping it or impact.

(2) If the display panel is damaged and the liquid crystal substance leaks out, be sure not to get any in your mouth. If the substance contacts your skin or clothes, wash it off using soap and water.

(3) Do not apply excessive force to the display surface or the adjoining areas since this may cause the color tone to vary. Do not touch the display with bare hands. This will stain the display area and degraded insulation between terminals (some cosmetics are determined to the polarizer).

(4) The polarizer covering the display surface of the LCD module is soft and easily scratched. Handle this polarizer carefully. Do not touch, push or rub the exposed polarizers with anything harder than an HB pencil lead (glass, tweezers, etc.). Do not put or attach anything on the display area to avoid leaving marks on. Condensation on the surface and contact with terminals due to cold will damage, stain or dirty the polarizer. After products are tested at low temperature they must be warmed up in a container before coming is contacting with room temperature air.

(5) If the display surface becomes contaminated, breathe on the surface and gently wipe it with a soft dry cloth. If it is heavily contaminated, moisten cloth with one of the following solvents

- Isopropyl alcohol
- Ethyl alcohol

Do not scrub hard to avoid damaging the display surface.

(6) Solvents other than those above-mentioned may damage the polarizer. Especially, do not use the following.

- Water
- Ketone
- Aromatic solvents

Wipe off saliva or water drops immediately, contact with water over a long period of time may cause deformation or color fading. Avoid contacting oil and fats.

(7) Exercise care to minimize corrosion of the electrode. Corrosion of the electrodes is accelerated by water droplets, moisture condensation or a current flow in a high-humidity environment.

(8) Install the LCD Module by using the mounting holes. When mounting the LCD module make sure it is free of twisting, warping and distortion. In particular, do not forcibly pull or bend the I/O cable or the backlight cable.

(9) Do not attempt to disassemble or process the LCD module.

(10) NC terminal should be open. Do not connect anything.

(11) If the logic circuit power is off, do not apply the input signals.

The information contained herein is the exclusive property of ShenZhen BELIJ Electronic technology co., LTD, and shall not be distributed, reproduced, or disclosed in whole or in part without prior written permission of ShenZhen BELIJ Electronic technology co., LTD.

(12) Electro-Static Discharge Control，Since this module uses a CMOS LSI, the same careful attention should be paid to electrostatic discharge as for an ordinary CMOS IC. To prevent destruction of the elements by static electricity, be careful to maintain an optimum work environment.

- Before remove LCM from its packing case or incorporating it into a set, be sure the module and your body have the same electric potential. Be sure to ground the body when handling the LCD modules.
- Tools required for assembling, such as soldering irons, must be properly grounded. Make certain the AC power source for the soldering iron does not leak. When using an electric screwdriver to attach LCM, the screwdriver should be of ground potentiality to minimize as much as possible any transmission of electromagnetic waves produced sparks coming from the commutator of the motor.
- To reduce the amount of static electricity generated, do not conduct assembling and other work under dry conditions. To reduce the generation of static electricity be careful that the air in the work is not too dried. A relative humidity of 50%-60% is recommended. As far as possible make the electric potential of your work clothes and that of the work bench the ground potential
- The LCD module is coated with a film to protect the display surface. Exercise care when peeling off this protective film since static electricity may be generated

(13)Since LCM has been assembled and adjusted with a high degree of precision, avoid applying excessive shocks to the module or making any alterations or modifications to it.

- Do not alter, modify or change the shape of the tab on the metal frame.
- Do not make extra holes on the printed circuit board, modify its shape or change the positions of components to be attached.
- Do not damage or modify the pattern writing on the printed circuit board.
- Absolutely do not modify the zebra rubber strip (conductive rubber) or heat seal connector.
- Except for soldering the interface, do not make any alterations or modifications with a soldering iron.
- Do not drop, bend or twist LCM.

2. Storage precautions

2.1 When storing the LCD modules, avoid exposure to direct sunlight or to the light of fluorescent lamps.

2.2 The LCD modules should be stored under the storage temperature range. If the LCD modules will be stored for a long time, the recommend condition is:

Temperature : 0℃ ～ 40℃ Relatively humidity: ≤80%

2.3 The LCD modules should be stored in the room without acid, alkali and harmful gas.

2.4 The LCD modules should be no falling and violent shocking during transportation, and also should avoid excessive press, water, damp and sunshine.

--------- END

The information contained herein is the exclusive property of ShenZhen BELIJ Electronic technology co., LTD, and shall not be distributed, reproduced, or disclosed in whole or in part without prior written permission of ShenZhen BELIJ Electronic technology co., LTD.