SPECIFICATION
FOR
LCD MODULE

Customer : _____

CustomerP/N _____

Model No. : B26C20117Q-01

Version : V00

Date : 2026-02-05

Final Approval by Customer

LCM Machinery OK ☐	Checked By	
LCM Display OK ☐	Checked By	
LCM NG ☐ LCM OK ☐	Approved By	

ShenZhen BELIJ Confirmed :

DESIGN	CHECK	APPROVAL

Add: 3/F,C Building.zhongnangang.Industrial city,sili Road.guanlan Town,shenzhen city
Http: www.szbelij.com
Tel: (0755)29062552 Fax: (0755)29062550 PC: 518000

LIST OF CONTENTS

No.	CONTENTS	PAGE
1	REVISION HISTORY	
2	GENERAL INFORMATION	
3	ABSOLUTE MAXIMUM RATINGS	
4	DC ELECTRICAL CHARACTERISTICS	
5	TIMING CHARACTERISTICS	
6	RESET TIMING	
7	EXTERNAL DIMENSIONS	
8	INTERFACE SIGNALS	
9	ELECTRO-OPTICAL CHARACTERISTICS	
10	RELIABILITY TEST CONDITIONS	
11	INSPECTION CRITERION	
12	PRECAUTINGS FOR USING LCD MODULES	

The information contained herein is the exclusive property of ShenZhen BELIJ Electronic technology co., LTD, and shall not be distributed, reproduced, or disclosed in whole or in part without prior written permission of ShenZhen BELIJ Electronic technology co., LTD.

1 REVISION HISTORY

Version	Date	Description	Revised By
V00	2026-02-05	First Issued	LQ

The information contained herein is the exclusive property of ShenZhen BELIJ Electronic technology co., LTD, and shall not be distributed, reproduced, or disclosed in whole or in part without prior written permission of ShenZhen BELIJ Electronic technology co., LTD.

2 GENERAL INFORMATION

Item	Specification	Unit
LCD size 液晶面板尺寸	2.0	inch
Display Mode 显示模式	Normally Black	--
Resolution 分辨率	240(RGB)x320	Pixel
Pixel pitch 像素尺寸	0.1275 (H) x 0.1275 (V)	mm
Pixel Arrangement 像素排列	RGB Vertical Stripe	
Viewing direction 视角	Free	-
Module outline dimension	34.6(H)* 47.8(V)*2.08(D)	mm
LCD AA 液晶显示区域	30.6 (H)* 40.8 (V)	mm
TP VA 触摸可视区域	/	mm
Driver IC 驱动芯片	ST7789P3	-
Interface 接口类型	SPI	--
Backlight 背光类型	White LED	--
Touch IC 触摸芯片	/	--
支持点数	/	--
Touch structure 触摸结构	/	--
Cover lens 盖板	/	--
Colors 颜色	/	--
Operating Temperature 工作温度	-10℃~ +60℃	--
Storage Temperature 存储温度	-20℃~ +70℃	--

The information contained herein is the exclusive property of ShenZhen BELIJ Electronic technology co., LTD, and shall not be distributed, reproduced, or disclosed in whole or in part without prior written permission of ShenZhen BELIJ Electronic technology co., LTD.

3 ABSOLUTE MAXIMUM RATINGS

Parameter	Symbol	Min	Max	Unit	Note
Power Supply voltage 1	VCI~GND	-0.3	4.6	V	
Power Supply voltage 2	IOVCC~GND	-0.3	4.6	V	
Logic Input Voltage Range	V_{IN}	-0.3	IOVCC+0.5	V	
Logic Output Voltage Range	V_O	-0.3	IOVCC+0.5	V	
Operating temperature	Topr	-10	+60	℃	
Storage temperature	Tstg	-20	+70	℃	

* The absolute maximum rating values of this product are not allowed to be exceeded at any times. Should a module be used with any of the absolute maximum ratings exceeded, the characteristics of the module may not be recovered, or in an extreme case, the module may be permanently destroyed.

4 DC ELECTRICAL CHARACTERISTICS

4.1 Driving TFT LCD Panel

AGND = GND = 0V, Ta = 25℃

Parameter	Symbol	Min	Typ	Max	Unit
Supply voltage for analog circuit	VCI	2.6	2.8	3.3	V
Supply voltage for logic circuit	IOVCC	1.65	1.8	3.3	V
Input voltage 'H'level	V_{IH}	0.7*IOVCC	—	IOVCC	V
Input voltage 'L'level	V_{IL}	GND	—	0.3*IOVCC	V
Output voltage 'H'level	V_{OH}	0.8*IOVCC	—	IOVCC	V
Output voltage 'L'level	V_{OL}	GND	—	0.2*IOVCC	V

4.2 Backlight Characteristics

Ta = 25℃

Item	Symbol	Min	Typ	Max	Unit	Condition
Forward voltage	Vf	2.8	3.2	3.4	V	If=80 mA
Number of LED	-	1X4			Piece	-
Connection mode	S/P	1Serial/4Parallel			-	-

Using condition: constant current driving method If= 4×20mA (+/-10%)

The information contained herein is the exclusive property of ShenZhen BELIJ Electronic technology co., LTD, and shall not be distributed, reproduced, or disclosed in whole or in part without prior written permission of ShenZhen BELIJ Electronic technology co., LTD.

5 TIMING CHARACTERISTICS

5.1 Serial Interface Characteristics (3-line serial)

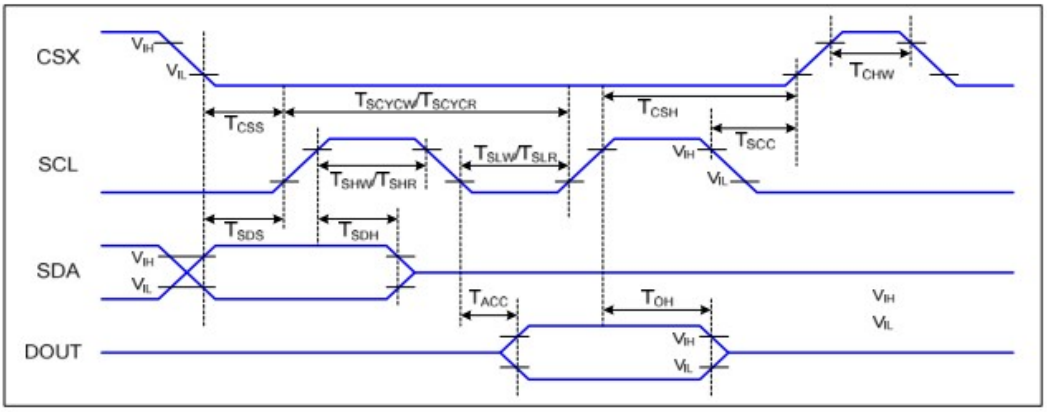

Figure5.1.1 3-line serial Interface Timing Characteristics

VDDI=1.65 to 3.3V, VDD=2.4 to 3.3V, AGND=DGND=0V, Ta=25℃

Signal	Symbol	Parameter	Min	Max	Unit	Description
CSX	T_{CSS}	Chip select setup time (write)	15		ns	
	T_{CSH}	Chip select hold time (write)	15		ns	
	T_{CSS}	Chip select setup time (read)	60		ns	
	T_{SCC}	Chip select hold time (read)	65		ns	
	T_{CHW}	Chip select "H" pulse width	40		ns	
SCL	T_{SCYCW}	Serial clock cycle (Write)	16		ns	
	T_{SHW}	SCL "H" pulse width (Write)	7		ns	
	T_{SLW}	SCL "L" pulse width (Write)	7		ns	
	T_{SCYCR}	Serial clock cycle (Read)	150		ns	
	T_{SHR}	SCL "H" pulse width (Read)	60		ns	
	T_{SLR}	SCL "L" pulse width (Read)	60		ns	
SDA (DIN)	T_{SDS}	Data setup time	7		ns	
	T_{SDH}	Data hold time	7		ns	
DOUT	T_{ACC}	Access time	10	50	ns	For maximum CL=30pF
	T_{OH}	Output disable time	15	50	ns	For minimum CL=8pF

Figure5.1.2 3-line serial Interface Characteristics

The information contained herein is the exclusive property of ShenZhen BELIJ Electronic technology co., LTD, and shall not be distributed, reproduced, or disclosed in whole or in part without prior written permission of ShenZhen BELIJ Electronic technology co., LTD.

5.2 Serial Interface Characteristics (4-line serial)

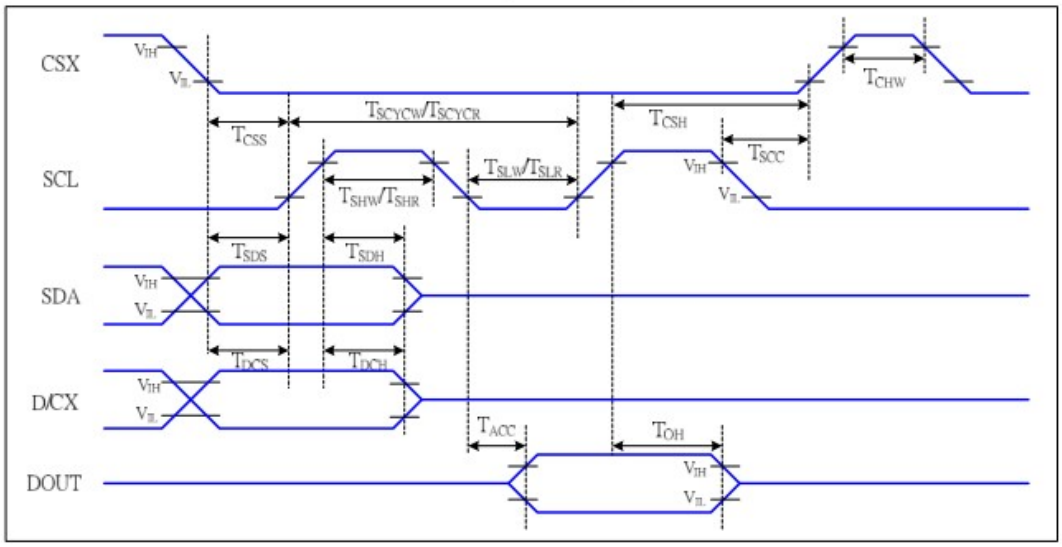

Figure5.2.1 4-line serial Interface Timing Characteristics

Ta=25℃, IOVCC=1.65~2.8V, VCC=2.6~3.3V

Signal	Symbol	Parameter	Min	Max	Unit	Description
CSX	T CSS	Chip select setup time (write)	15	-	ns	
	T CSH	Chip select hold time (write)	15	-	ns	
	T CSS	Chip select setup time (read)	60	-	ns	
	T SCC	Chip select hold time (read)	65	-	ns	
	T CHW	Chip select “H” pulse width	40	-	ns	
SCL	T SCYCW	Serial clock cycle (Write)	16	-	ns	-write command & data ram
	T SHW	SCL “H” pulse width (Write)	7	-	ns	
	T SLW	SCL “L” pulse width (Write)	7	-	ns	
	T SCYCR	Serial clock cycle (Read)	150	-	ns	-read command & data ram
	T SHR	SCL “H” pulse width (Read)	60	-	ns	
	T SLR	SCL “L” pulse width (Read)	60	-	ns	
DCX	T DCS	D/CX setup time	10	-	ns	
	T DCH	D/CX hold time	10	-	ns	
SDA (DIN)	T SDS	Data setup time	7	-	ns	
	T SDH	Data hold time	7	-	ns	For maximun CL=30pF For minimum CL=8pF
DOUT	T ACC	Access time	10	50	ns	
	T OH	Output disable time	15	50	ns	

The information contained herein is the exclusive property of ShenZhen BELIJ Electronic technology co., LTD, and shall not be distributed, reproduced, or disclosed in whole or in part without prior written permission of ShenZhen BELIJ Electronic technology co., LTD.

5.3 RGB Interface Characteristics

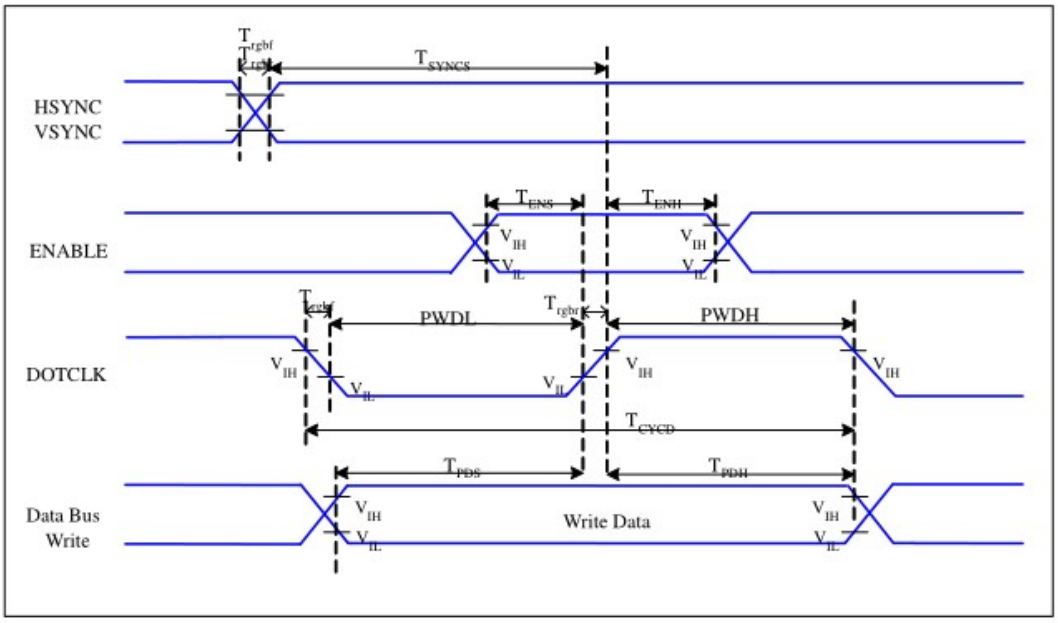

Figure5.3.1 RGB Interface Timing Characteristics

VDDI=1.65 to 3.3V, VDD=2.4 to 3.3V, AGND=DGND=0V, Ta=25℃

Signal	Symbol	Parameter	MIN	MAX	Unit	Description
HSYNC, VSYNC	T_{SYNCS}	VSYNC, HSYNC Setup Time	30	-	ns	
ENABLE	T_{ENS}	Enable Setup Time	25	-	ns	
	T_{ENH}	Enable Hold Time	25	-	ns	
DOTCLK	PWDH	DOTCLK High-level Pulse Width	60	-	ns	
	PWDL	DOTCLK Low-level Pulse Width	60	-	ns	
	T_{CYCD}	DOTCLK Cycle Time	120	-	ns	
	Trghr, Trghf	DOTCLK Rise/Fall time	-	20	ns	
DB	T_{PDS}	PD Data Setup Time	50	-	ns	
	T_{PDH}	PD Data Hold Time	50	-	ns	

Figure5.3.2 18/16 Bits RGB Interface Timing Characteristics

The information contained herein is the exclusive property of ShenZhen BELIJ Electronic technology co., LTD, and shall not be distributed, reproduced, or disclosed in whole or in part without prior written permission of ShenZhen BELIJ Electronic technology co., LTD.

5.4 Display Parallel 18/16/9/8-bit Interface Timing Characteristics (8080 system)

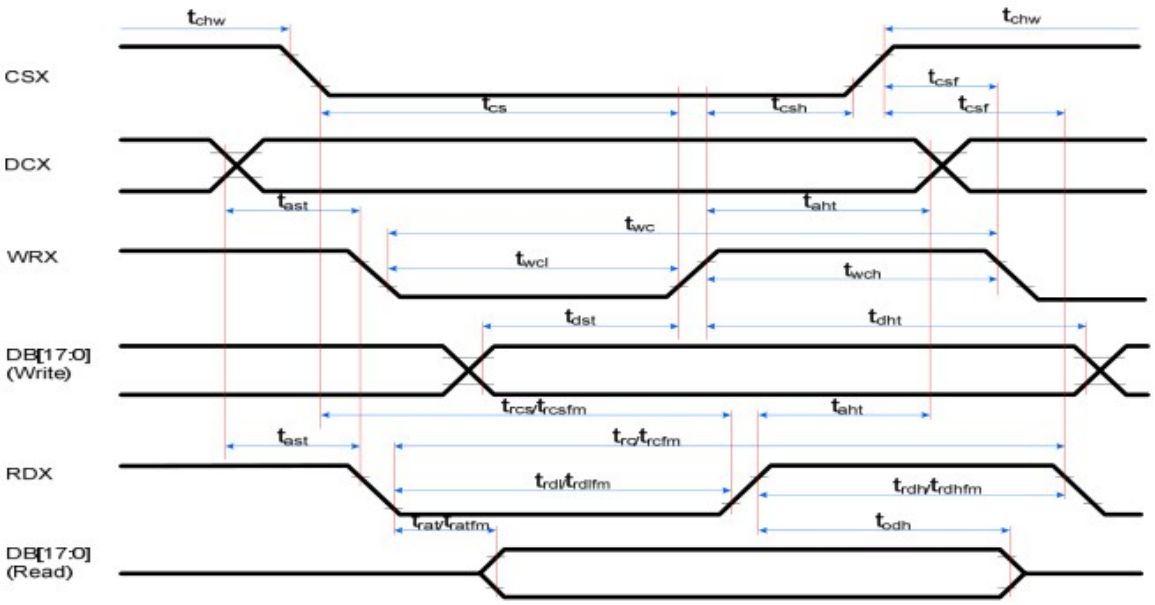

Figure5.4.1 80 MCU Interface Timing

Ta=25℃, IOVCC=1.65~2.8V, VCC=2.6~3.3V

Signal	Symbol	Parameter	Min	Max	Unit	Description
DCX	tast	Address setup time	0	-	ns	
	taht	Address hold time (Write/Read)	10	-	ns	
CSX	tchw	CSX "H" pulse width	0	-	ns	
	tcs	Chip Select setup time (Write)	15	-	ns	
	trcs	Chip Select setup time (Read ID)	45	-	ns	
	rcsfm	Chip Select setup time (Read FM)	355	-	ns	
	tcsf	Chip Select Wait time (Write/Read)	10	-	ns	
WRX	twc	Write cycle	66	-	ns	
	twrh	Write Control pulse H duration	15	-	ns	
	twrl	Write Control pulse L duration	15	-	ns	
RDX(FM)	trcfm	Read Cycle (FM)	450	-	ns	
	trdhfm	Read Control H duration (FM)	90	-	ns	
	trdlfm	Read Control L duration (FM)	355	-	ns	
RDX(ID)	trc	Read cycle (ID)	160	-	ns	
	trdh	Read Control pulse H duration	90	-	ns	
	trdl	Read Control pulse L duration	45	-	ns	
D[17:0] D[15:0] D[8:0] D[7:0]	tdst	Write data setup time	10	-	ns	For maximun CL=30pF For minimum CL=8pF
	tdht	Write data hold time	10	-	ns	
	trat	Read access time	-	40	ns	
	tratfm	Read access time	-	340	ns	
	trod	Read output disable time	20	80	ns	

Note : The rising time and falling time (Tr, Tf) of input signal are specified at 15 ns or less. Logic high and low levels are specified as 30% and 70% of IOVCC for Input signals.

CSX Timings:

The information contained herein is the exclusive property of ShenZhen BELIJ Electronic technology co., LTD, and shall not be distributed, reproduced, or disclosed in whole or in part without prior written permission of ShenZhen BELIJ Electronic technology co., LTD.

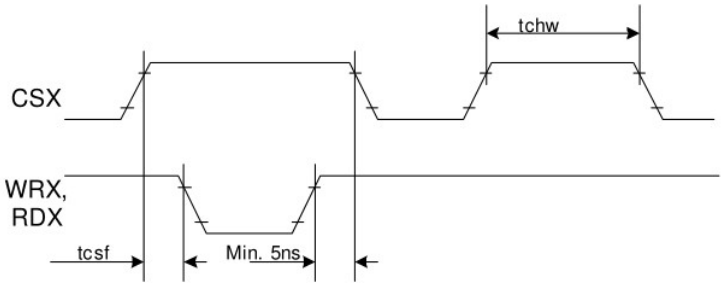

Note: Logic high and low levels are specified as 30% and 70% of IOVCC for Input signals.

Write to read or read to write timings:

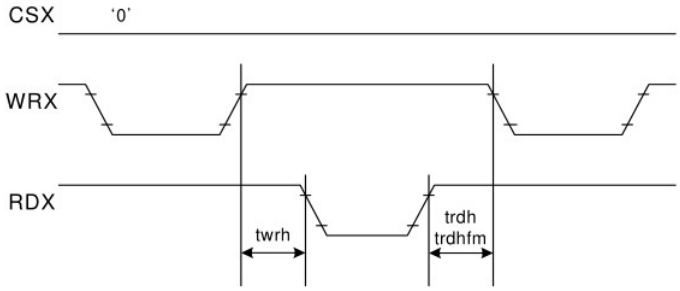

Note: Logic high and low levels are specified as 30% and 70% of IOVCC for Input signals.

Table 5.4.2 80 MCU Interface Characteristics

The information contained herein is the exclusive property of ShenZhen BELIJ Electronic technology co., LTD, and shall not be distributed, reproduced, or disclosed in whole or in part without prior written permission of ShenZhen BELIJ Electronic technology co., LTD.

6. Reset Timing

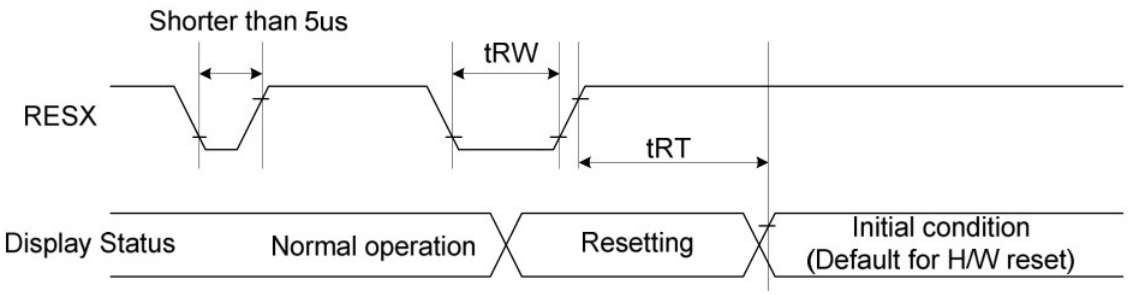

Signal	Symbol	Parameter	Min	Max	Unit	Description
RESX	tRW	Reset pulse duration	10	-	us	-
	tRT	Reset cancel	-	5	ms	Note 1,5
			-	120	ms	Note 1,6,7

Note:

1. The reset cancel includes also required time for loading ID bytes, VCOM setting and other settings from NV memory to registers. This loading is done every time when there is HW reset cancel time (tRT) within 5 ms after a rising edge of RESX.
2. Spike due to an electrostatic discharge on RESX line does not cause irregular system reset according to the table below:

RESX Pulse	Action
Shorter than 5us	Reset Rejected
Longer than 10us	Reset
Between 5us and 10us	Reset starts

3. During the Reset period, the display will be blanked (When Reset starts in the Sleep Out mode, the display will enter the blanking sequence in at least 120 ms. The display remains the blank state in the Sleep In mode.) and then return to the default condition for the Hardware Reset.
4. Spike Rejection can also be applied during a valid reset pulse, as shown below:

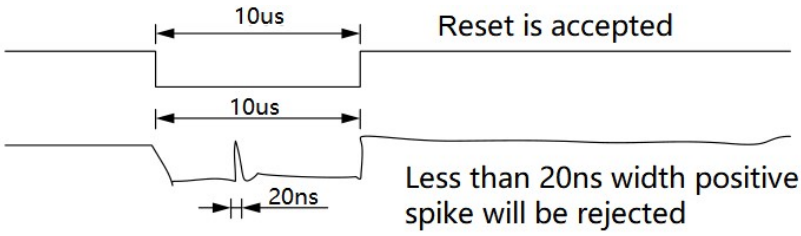

Positive Noise Pulse during Reset Low

5. When Reset is applied during the Sleep In Mode.
6. When Reset is applied during the Sleep Out Mode.
7. It is necessary to wait 5msec after releasing RESX before sending commands. The Sleep Out command also cannot be sent in 120msec.

The information contained herein is the exclusive property of ShenZhen BELIJ Electronic technology co., LTD, and shall not be distributed, reproduced, or disclosed in whole or in part without prior written permission of ShenZhen BELIJ Electronic technology co., LTD.

7 EXTERNAL DIMENSIONS

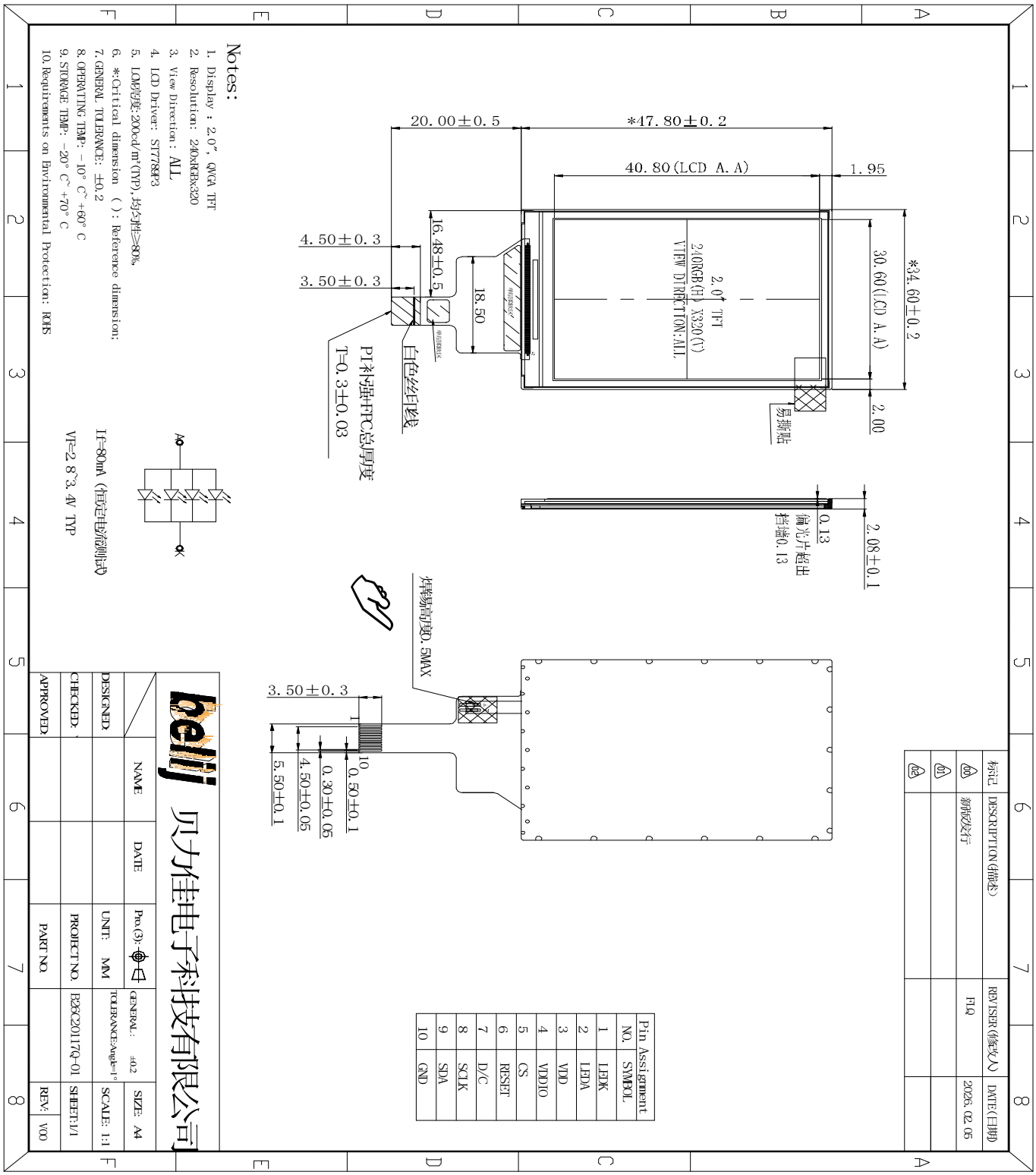

The information contained herein is the exclusive property of ShenZhen BELIJ Electronic technology co., LTD, and shall not be distributed, reproduced, or disclosed in whole or in part without prior written permission of ShenZhen BELIJ Electronic technology co., LTD.

8 INTERFACE SIGNAL

Pin No.	Symbol	Description
1	LED-K	LED backlight cathode.
2	LED A	LED backlight anode.
3	VDD	Power supply for the analog power.
4	VDDIO	Power supply for the logic power and I/O circuit.
5	CS	Chip select
6	RESET	Reset signal(low active)
7	DC	Data or command select pin
8	SCLK	Servers as SCL (Serial Clock)
9	SDA	Serial data input pin in serial bus system interface
10	GND	Power ground

The information contained herein is the exclusive property of ShenZhen BELIJ Electronic technology co., LTD, and shall not be distributed, reproduced, or disclosed in whole or in part without prior written permission of ShenZhen BELIJ Electronic technology co., LTD.

9 ELECTRO-OPTICAL CHARACTERISTICS

Item		Symbol		Condition	Min	Typ	Max	Unit	Note
Transmittance (With polarizer)		T%		θ=0° Ta=25℃		4.5	-	%	1
Contrast ratio		Cr			800	1000	-	-	3
Response time		Ton+Toff			-	30	35	ms	4
TLCM Luminance		LV				200	-	cd/㎡	2
Viewing angle range		H or V er	Θ_{x+}	Center CR>10	-	80	-	deg	5
			Θ_{x-}		-	80	-	deg	
			Θ_{Y+}		-	80	-	deg	
			Θ_{Y-}		-	80	-	deg	
CIE(x,y) chromaticity	Red	x		Viewing normal angle Θx=θy=0° Ta=25℃	-0.03	0.633	+0.03	-	6
		y				0.360		-	
	Green	x				0.321		-	
		y				0.636		-	
	Blue	x				0.138		-	
		y				0.072		-	
	White	x						-	
		y						-	

Note 1.Ambient condition：25℃±2℃，60±10%RH，under 10 Lunx in the darkroom。
Note 2.Measure device：BM-7A (TOPCON)，viewing cone=2°
Lv = Average Surface Luminance with all white pixels (P1,P2,P3,P4,P5)

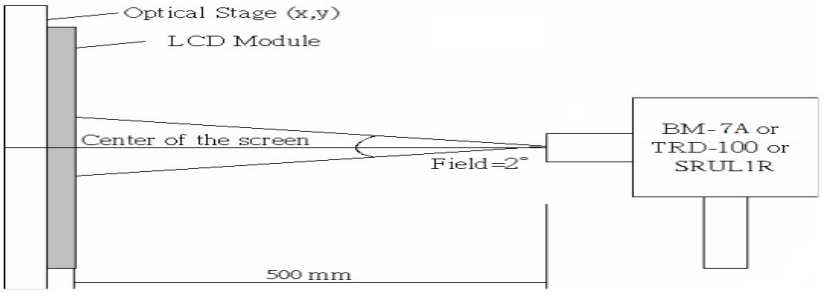

Note 3. Definition of Contrast Ratio：

$$CR = \frac{\text{Average Surface Luminance with all black pixels (P1,P2,P3,P4,P5)}}{}$$

The information contained herein is the exclusive property of ShenZhen BELIJ Electronic technology co., LTD, and shall not be distributed, reproduced, or disclosed in whole or in part without prior written permission of ShenZhen BELIJ Electronic technology co., LTD.

Average Surface Luminance with all white pixels (P1,P2,P3,P4,P5)

Note 4. Definition of Response Time (Ton, Toff), The response time is defined as the time interval between the 10% and 90% amplitudes.

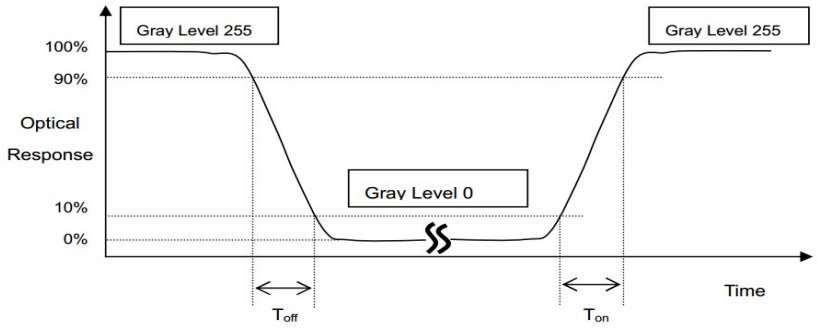

Note 5. Definition of view angle(θ，ψ)：

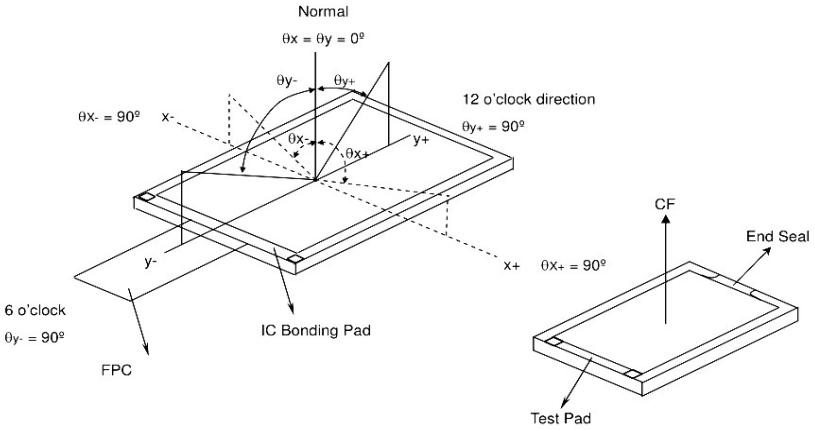

Note 6. The LCD module should be stabilized at a given temperature for 20 minutes to avoid abrupt temperature change during measuring. In order to stabilize the luminance, the measurement should be executed after lighting Backlight for 20 minutes in a windless room. Measouring method for Contrast ratio, surface luminance, Luminance uniformity,CIE(x,y) chromaticity.

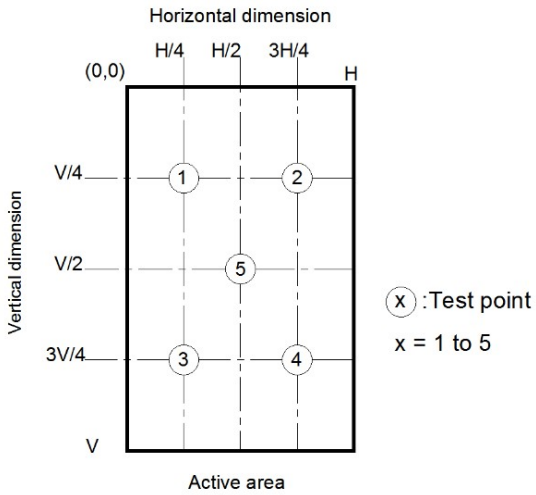

Light spot size ∅=7mm, 500mm distance from the LCD surface to detector lens measurement instrument is TOPCON's luminance meter BM-7

The information contained herein is the exclusive property of ShenZhen BELIJ Electronic technology co., LTD, and shall not be distributed, reproduced, or disclosed in whole or in part without prior written permission of ShenZhen BELIJ Electronic technology co., LTD.

10 RELIABILITY TEST

Reliability test conditions (Polarizer characteristics null)

No.	Items	Condition	Inspection after test
1	High Temperature Storage	T = 70℃for 72 hr	Inspection after 4 hours storage at room temperature, the sample shall be free from defects: 1.Air bubble in the LCD 2.Sealleak; 3.Non-display; 4.missing segments; 5.Glass crack; 6.Current Idd is twice higher than initial value.
2	Low Temperature Storage	T = -20℃for 72 hr	
3	High Temperature Operating	T = 60℃for 72 hr	
4	Low Temperature Operating	T = -10℃for 72 hr (But no condensation of dew)	
5	High Temp. and High Humidity Storage	T = 60℃/90% for 72 hr (But no condensation dew)	
6	Thermal Shock	-20°C~25~70°C×10cycles (30min.) (5min.) (30min.)	
7	Dropping test (non-operation)	Drop to the ground from 76cm height, one time, every side of carton. (Packing condition)	
8	Packing Vibration (non-operation)	Frequency：10Hz~55Hz~10Hz Amplitude：1.0mm, X，Y，Z direction for total 3hours (Packing condition)	
9	ESD (整机)	Contact:±8KV,Air: ±12KV R: 330Ω C: 150pF Air discharge, 10time	

Note:

(1)The test samples should be applied to only one test item.

(2)Sample size for each test item is 5~10pcs.

(3)In case of malfunction defect caused by ESD damage, if it would be recovered to normal state after resetting, it would be judge as a good part.
Using ionizer(an antistatic blower) is recommended at working area in order to reduce electro-static voltage.
When removing protection film from LCM panel, peel off the tag slowly (recommended more than one second) while blowing with ionizer toward the peeling face to minimize ESD which may damage electrical circuit.

(4) Please use automatic switch testing mode when test operating mode.

The information contained herein is the exclusive property of ShenZhen BELIJ Electronic technology co., LTD, and shall not be distributed, reproduced, or disclosed in whole or in part without prior written permission of ShenZhen BELIJ Electronic technology co., LTD.

11 INSPECTION CRITERION

This specification is made to be used as the standard acceptance/rejection criteria for Normal LCM Product.

1 Sample plan

Sampling plan according to GB/T2828.1-2003/ISO 2859-1：1999 and ANSI/ASQC Z1.4-1993,normal level 2 and based on:

Major defect: AQL 0.65

Minor defect: AQL 1.0

2. Inspection condition

Viewing distance for cosmetic inspection is about 30cm with bare eyes, and under an environment of 20~40W light intensity, all directions for inspecting the sample should be within 45° against perpendicular line. (Normal temperature 20~25°C and normal humidity 60±15%RH).

3. Definition of inspection zone in LCD.

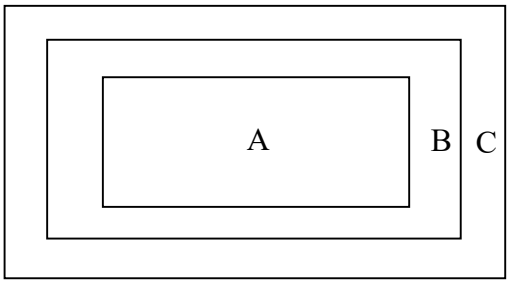

Zone A: character/Digit area

Zone B: viewing area except Zone A (Zone A + Zone B=minimum Viewing area)

Zone C: Outside viewing area (invisible area after assembly in customer's product)

Fig.1 Inspection zones in an LCD.

Note: As a general rule, visual defects in Zone C are permissible, when it is no trouble for quality and assembly of customer's product.

4.Standards of inspection items

4.1 Major Defect

Item No	Items to be inspected	Inspection Standard	Classification of defects
4.1.1	All functional defects	1.No display	Major
		2.Display abnormally	
		3.Missing vertical，horizontal segment	
		4.Short circuit	
		5. Back-light no lighting, flickering and abnormal lighting.	

The information contained herein is the exclusive property of ShenZhen BELIJ Electronic technology co., LTD, and shall not be distributed, reproduced, or disclosed in whole or in part without prior written permission of ShenZhen BELIJ Electronic technology co., LTD.

4.1.2	Missing	Missing component	
4.1.3	Outline dimension	Overall outline dimension beyond the drawing is not allowed.	
4.1.4	linearity	No more than 1.5%	

4.2 Cosmetic Defect

Item No	Items to be inspected	Inspection Standard				Classification of defects
4.2.1	Clear Spots Black and white Spot defect Pinhole, Foreign Particle, polarizer Dirt	For dark/white spot, sizeΦis defined as Φ=(x + y)/2 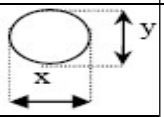				Minor
		1				
		Zone / Size(mm)	Acceptable Qty			
			A	B	C	
		Φ≤0.15	Ignore		Ignore	
		0.15＜Φ≤0.20	2			
		0.20＜Φ≤0.30	1			
		Φ＞0.30	0			
	Clear Spots TP Dirt	2				Minor
		Zone / Size(mm)	Acceptable Qty			
			A	B	C	
		Φ≤0.15	Ignore		Ignore	
		0.15＜Φ≤0.20	2			
		0.20＜Φ≤0.30	1			
		Φ＞0.30	0			
	Dim Spots Circle shaped and dim edged defects	3				Minor
		Zone / Size(mm)	Acceptable Qty			
			A	B	C	
		Φ≤0.2	Ignore		Ignore	
		0.20＜Φ≤0.40	2			
		0.40＜Φ≤0.60	1			
		Φ＞0.60	0			

The information contained herein is the exclusive property of ShenZhen BELIJ Electronic technology co., LTD, and shall not be distributed, reproduced, or disclosed in whole or in part without prior written permission of ShenZhen BELIJ Electronic technology co., LTD.

Item No	Items to be inspected	Inspection Standard					Classification of defects
4.2.2	Line defect Black line, White line, Foreign material on polarizer	Size(mm)		Acceptable Qty			Minor
		L(Length)	W(Width)	Zone			
				A	B	C	
		Ignore	W≤0.05	Ignore		Ignore	
		L ≤5.0	0.05＜W≤0.08	2			
			W＞0.08	0			
	Foreign material on TP film	The line can be seen after mobile phone in the operating condition:					Minor
		Size(mm)		Acceptable Qty			
		L(Length)	W(Width)	Zone			
				A	B	C	
		Ignore	W≤0.05	Ignore		Ignore	
		L ≤5.0	0.05＜W≤0.08	3			
			W＞0.08	0			
4.2.3	Dim line defect Polarizer scratch TP film scratch	If the scratch can be seen after mobile phone cover assembling or in the operating condition, judge by the line defect of 4.2.2. If the scratch can be seen only in non-operating condition or some special angle, judge by the following.					Minor
		Size(mm)		Acceptable Qty			
		L(Length)	W(Width)	Zone			
				A	B	C	
		Ignore	W≤0.03	Ignore		Ignore	
		5.0＜L≤10.0	0.03＜W≤0.05	2			
		L≤5.0	0.05＜W≤0.08	1			
			W＞0.08	0			
4.2.4	Polarize Air bubble	Air bubbles between glass & polarizer					Minor
		Size(mm) \ Zone		Acceptable Qty			
				A	B	C	
		Φ≤0.20		Ignore		Ignore	
		0.20＜Φ≤0.3		2			
		Φ＞0.30		0			

The information contained herein is the exclusive property of ShenZhen BELIJ Electronic technology co., LTD, and shall not be distributed, reproduced, or disclosed in whole or in part without prior written permission of ShenZhen BELIJ Electronic technology co., LTD.

Item No	Items to be inspected	Inspection Standard			Classification of defects
4.35	Glass defect	(i) Chips on corner A:LCD Glass defect 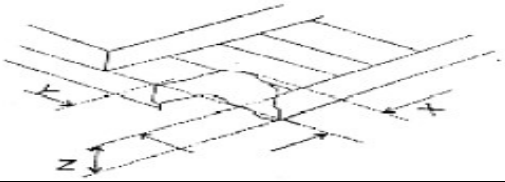 			Minor
		X(mm)	Y(mm)	Z(mm)	
		≤3.0	≤3.0	Disregard	
		Notes: S=contact pad length Chips on the corner of terminal shall not be allowed to extend into the ITO pad or expose perimeter seal. B:TP Glass defect 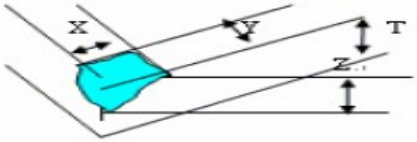 			
		X(mm)	Y(mm)	Z(mm)	
		≤3.0	≤3.0	Disregard	
		(ii)Usual surface cracks A:LCD Glass defect 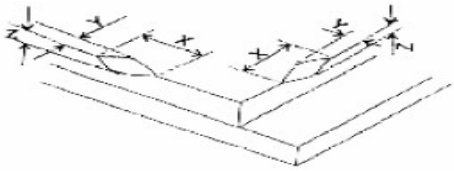 			
		X(mm)	Y(mm)	Z(mm)	
		≤3.0	<Inner border line of the seal	Disregard	
		B:TP Glass defect 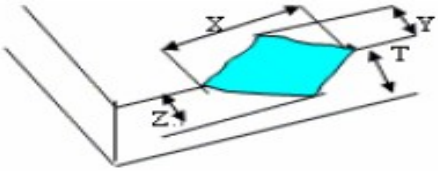 			
		X(mm)	Y(mm)	Z(mm)	
		≤6.0	＜2.0	Disregard	
		(iii) Crack Cracks tend to break are not allowed. 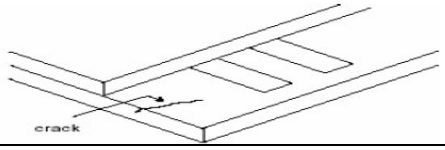 			

The information contained herein is the exclusive property of ShenZhen BELIJ Electronic technology co., LTD, and shall not be distributed, reproduced, or disclosed in whole or in part without prior written permission of ShenZhen BELIJ Electronic technology co., LTD.

12 PRECAUTIONS FOR USE OF LCD MODULES

1. Handling Precautions

(1) The display panel is made of glass and polarizer. As glass is fragile. It tends to become or chipped during handling especially on the edges. Please avoid dropping or jarring. Do not subject it to a mechanical shock by dropping it or impact.

(2) If the display panel is damaged and the liquid crystal substance leaks out, be sure not to get any in your mouth. If the substance contacts your skin or clothes, wash it off using soap and water.

(3) Do not apply excessive force to the display surface or the adjoining areas since this may cause the color tone to vary. Do not touch the display with bare hands. This will stain the display area and degraded insulation between terminals (some cosmetics are determined to the polarizer).

(4) The polarizer covering the display surface of the LCD module is soft and easily scratched. Handle this polarizer carefully. Do not touch, push or rub the exposed polarizers with anything harder than an HB pencil lead (glass, tweezers, etc.). Do not put or attach anything on the display area to avoid leaving marks on. Condensation on the surface and contact with terminals due to cold will damage, stain or dirty the polarizer. After products are tested at low temperature they must be warmed up in a container before coming is contacting with room temperature air.

(5) If the display surface becomes contaminated, breathe on the surface and gently wipe it with a soft dry cloth. If it is heavily contaminated, moisten cloth with one of the following solvents

- Isopropyl alcohol
- Ethyl alcohol

Do not scrub hard to avoid damaging the display surface.

(6) Solvents other than those above-mentioned may damage the polarizer. Especially, do not use the following.

- Water
- Ketone
- Aromatic solvents

Wipe off saliva or water drops immediately, contact with water over a long period of time may cause deformation or color fading. Avoid contacting oil and fats.

(7) Exercise care to minimize corrosion of the electrode. Corrosion of the electrodes is accelerated by water droplets, moisture condensation or a current flow in a high-humidity environment.

(8) Install the LCD Module by using the mounting holes. When mounting the LCD module make sure it is free of twisting, warping and distortion. In particular, do not forcibly pull or bend the I/O cable or the backlight cable.

(9) Do not attempt to disassemble or process the LCD module.

(10) NC terminal should be open. Do not connect anything.

(11) If the logic circuit power is off, do not apply the input signals.

The information contained herein is the exclusive property of ShenZhen BELIJ Electronic technology co., LTD, and shall not be distributed, reproduced, or disclosed in whole or in part without prior written permission of ShenZhen BELIJ Electronic technology co., LTD.

(12) Electro-Static Discharge Control，Since this module uses a CMOS LSI, the same careful attention should be paid to electrostatic discharge as for an ordinary CMOS IC. To prevent destruction of the elements by static electricity, be careful to maintain an optimum work environment.

- Before remove LCM from its packing case or incorporating it into a set, be sure the module and your body have the same electric potential. Be sure to ground the body when handling the LCD modules.
- Tools required for assembling, such as soldering irons, must be properly grounded. Make certain the AC power source for the soldering iron does not leak. When using an electric screwdriver to attach LCM, the screwdriver should be of ground potentiality to minimize as much as possible any transmission of electromagnetic waves produced sparks coming from the commutator of the motor.
- To reduce the amount of static electricity generated, do not conduct assembling and other work under dry conditions. To reduce the generation of static electricity be careful that the air in the work is not too dried. A relative humidity of 50%-60% is recommended. As far as possible make the electric potential of your work clothes and that of the work bench the ground potential
- The LCD module is coated with a film to protect the display surface. Exercise care when peeling off this protective film since static electricity may be generated

(13)Since LCM has been assembled and adjusted with a high degree of precision, avoid applying excessive shocks to the module or making any alterations or modifications to it.

- Do not alter, modify or change the shape of the tab on the metal frame.
- Do not make extra holes on the printed circuit board, modify its shape or change the positions of components to be attached.
- Do not damage or modify the pattern writing on the printed circuit board.
- Absolutely do not modify the zebra rubber strip (conductive rubber) or heat seal connector.
- Except for soldering the interface, do not make any alterations or modifications with a soldering iron.
- Do not drop, bend or twist LCM.

2. Storage precautions

2.1 When storing the LCD modules, avoid exposure to direct sunlight or to the light of fluorescent lamps.

2.2 The LCD modules should be stored under the storage temperature range. If the LCD modules will be stored for a long time, the recommend condition is:

Temperature : 0℃ ～ 40℃ Relatively humidity: ≤80%

2.3 The LCD modules should be stored in the room without acid, alkali and harmful gas.

2.4 The LCD modules should be no falling and violent shocking during transportation, and also should avoid excessive press, water, damp and sunshine.

--------- END

The information contained herein is the exclusive property of ShenZhen BELIJ Electronic technology co., LTD, and shall not be distributed, reproduced, or disclosed in whole or in part without prior written permission of ShenZhen BELIJ Electronic technology co., LTD.